modular



Client _____ Quantity _____

Project _____ Position _____

## ROC 1100

**Model:** R110/80BMFE/P **Cod:** MP01575125004

### Technical data

| | |
|---|---|
| **Modularity:** | On cabinet with doors |
| **Dimensions (mm):** | 800x1100x870 |
| **Total eletric power (kW):** | 13,2 |
| **Cooking zone dimensions 1 (LxD mm):** | 720x750 |
| **Nr. Wells:** | 1 |
| **Well litres 1:** | 40,5 |
| **Well dimensions 1 (mm):** | 720x750x98 |
| **Electric power (V):** | 380-415 |
| **Ampere (A):** | 20,5 |
| **Phases:** | 3N |
| **Cable section (mmq):** | 5G2,5 |
| **Frequency (Hz):** | 50-60 |
| **Net volume (m3):** | 0,766 |
| **Packing dimensions (mm):** | 880x1272x1274 |
| **Gross volume (m3):** | 1,426 |

### Features

| | |
|---|---|
| **Working top:** | Made of AISI 304 stainless steel with a thickness of 2 mm |
| **Material of plate:** | Chrome |
| **Plate finish:** | Smooth |
| **Tipologia ribaltamento:** | Manual input |
| **Knobs:** | Made of aluminum with IPX5 water protection |
| **Handles:** | The brushed aluminum handles allow for a secure and sturdy grip with a ergonomic lines |
| **Heating:** | Armored heating elements positioned under the well |

In order to constantly offer the best possible products we reserve the right to make changes on technical specifications without incurring any obligation for equipment previosly or subsequently sold.

Electric bratt pan, on cabinet with doors

Electric multifunction brattpan capacity 26 liters, model on cabinet with door. Side panels, bottom and back made of stainless steel. Top made of AISI 304 thickness 20/10. Designed for flush alignment. Rectangular cooking well Dim. 650x530 mm made of stainles steel AISI 304 and rounded edges. Heating by means of Incoloy 800 armored heating elements. Temperature control by means of thermostat. Lamp on control panel to indicate heating activation. Special design knobs to avoid water penetration in the control panel. Base completely made of stainless steel. Presses hinged doors. Ergonomic handle. Adjustable feet made of stainless steel. IPX5 protection rating. Electric power supply VAC 400 3N 50/60 Hz - 13,2 kW.

## Technical draw

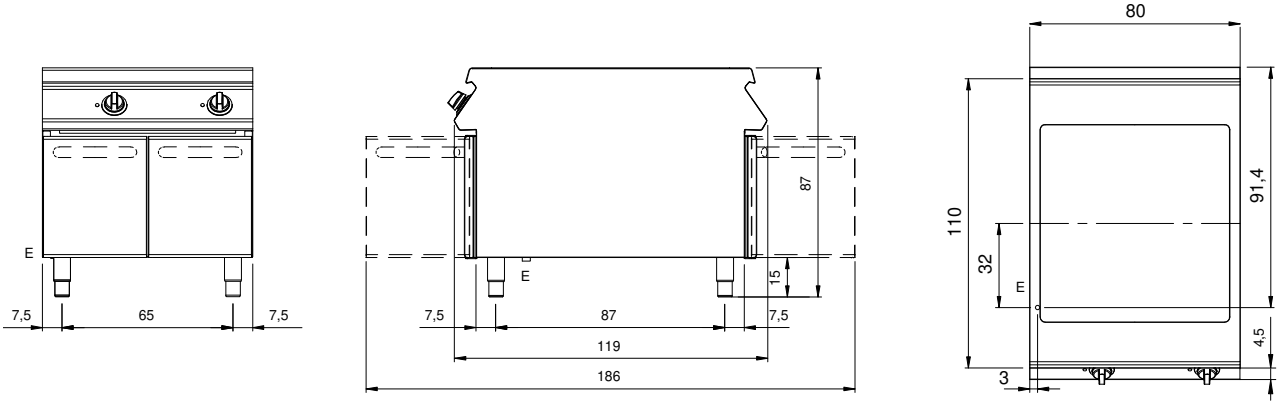


**E:** Electric power

In order to constantly offer the best possible products we reserve the right to make changes on technical specifications without incurring any obligation for equipment previosly or subsequently sold.