modular



Client _____ Quantity _____

Project _____ Position _____

ROC 1100

Model: R110/40BMFE/A **Cod:** MP01575125001

Technical data

Modularity:	On open cabinet
Dimensions (mm):	400x1100x870
Total eletric power (kW):	6,6
Cooking zone dimensions 1 (LxD mm):	320x750
Nr. Wells:	1
Well litres 1:	18
Well dimensions 1 (mm):	320x750x98
Electric power (V):	380-415
Ampere (A):	10,5
Phases:	3N
Cable section (mmq):	5G1,5
Frequency (Hz):	50-60
Net volume (m3):	0,383
Packing dimensions (mm):	480x1272x1240
Gross volume (m3):	0,757

Features

Working top:	Made of AISI 304 stainless steel with a thickness of 2 mm
Material of plate:	Chrome
Plate finish:	Smooth
Tipologia ribaltamento:	Manual input
Knobs:	Made of aluminum with IPX5 water protection
Heating:	Armored heating elements positioned under the well

In order to constantly offer the best possible products we reserve the right to make changes on technical specifications without incurring any obligation for equipment previosly or subsequently sold.

Electric multifunction brattpan capacity 13 litters, model on open cabinet. Side panels, bottom and back made of stainless steel. Top made of AISI 304 thickness 20/10. Designed for flush alignment. Rectangular cooking well Dim. 325x530 mm made of stainles steel AISI 304 and rounded edges. Heating by means of Incoloy 800 armored heating elements. Temperature control by means of thermostat. Lamp on control panel to indicate heating activation. Special design knobs to avoid water penetration in the control panel. Base completely made of stainless steel. Adjustable feet made of stainless steel. IPX5 protection rating. Electric power supply VAC 400 3N 50/60 Hz - 6,6 kW.

Technical draw

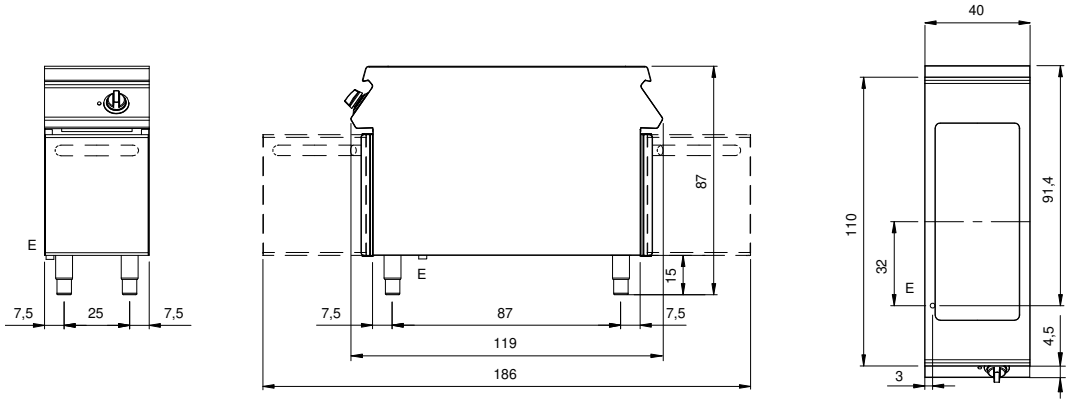

E: Electric power

In order to constantly offer the best possible products we reserve the right to make changes on technical specifications without incurring any obligation for equipment previosly or subsequently sold.