modular



Client _____ Quantity _____

Project _____ Position _____

## FUN 700

**Model:** F70/70FRGV/2V13/P **Cod:** MP01292113000

### Technical data

| | |
|---|---|
| **Modularity:** | On cabinet with door |
| **Dimensions (mm):** | 700x700x850 |
| **Total gas power (Kcal/h):** | 18917 |
| **Total gas power (kW):** | 22 |
| **Nr. Wells:** | 2 |
| **Well litres 1:** | 13 |
| **Well litres 2:** | 13 |
| **Well dimensions 1 (mm):** | 240x342x343 |
| **Well dimensions 2 (mm):** | 240x342x343 |
| **Gas connection:** | 1/2" |
| **Net volume (m3):** | 0,417 |
| **Packing dimensions (mm):** | 776x776x1180 |
| **Gross weight (kg):** | 82 |
| **Gross volume (m3):** | 0,711 |

### Features

| | |
|---|---|
| **Working top:** | Made of AISI 304 stainless steel with a thickness of 10/10 mm |
| **Type of heating:** | Direct |
| **Knobs:** | Knobs are made from a sturdy heat-resistant polymer blend and are equipped with liquid anti-leakage washer |
| **Heating:** | Heating pipes in the well |
| **Kit Gas:** | Natural gas conversion kit 30/50 m/bar (tested with natural gas G20) |

In order to constantly offer the best possible products we reserve the right to make changes on technical specifications without incurring any obligation for equipment previosly or subsequently sold.

Gas fryer, 2 vats capacity 13+13 lt. Set up on closed cabinet. Top and tubs in AISI 304 stainless steel; covering in AISI 304 stainless steel thickness 10/10; external reinforcements made of anti-corrosion material (aluminised sheet metal); bottoms and internal parts in AISI 430 steel; flue cover in enamelled steel. Drain valve located in the lower neutral compartment. Equipped with drip tray for collection of residual oil included. Oil heated with steel horizontal flame burners with piezoelectric ignition pilot burner. Gas is supplied by means of a thermostatic safety valve with thermocouple. Safety thermostat. Vat capacity 13+13 lt. Vat dimensions: 280x330x320h. mm. - 1 basket 1/1 with thermoplastic handle, 1 vat cover and 1 vat filter included for each vat Total power 22kW

## Technical draw

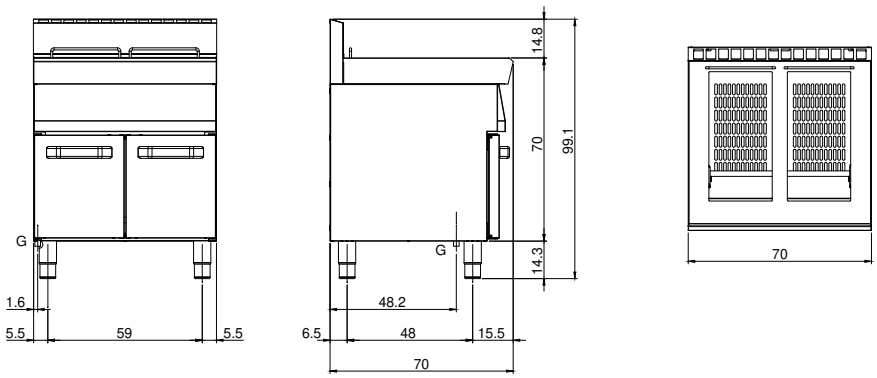


**G:** Gas connection 1/2"

In order to constantly offer the best possible products we reserve the right to make changes on technical specifications without incurring any obligation for equipment previosly or subsequently sold.