modular

Client _____ Quantity _____

Project _____ Position _____

ROC 900

Model: R90/80TPPGF/T **Cod:** MP01054114006



Technical data

Modularity:	Top
Dimensions (mm):	800x900x280
Total gas power (Kcal/h):	19777
Total gas power (kW):	23
Whole-plate power gas (kW):	7
Gas connection:	1/2"
Net volume (m3):	0,202
Packing dimensions (mm):	880x1026x509
Gross weight (kg):	78
Burner power 3 (kW):	6
Burner power 4 (kW):	10
Gross volume (m3):	0,460

Features

Working top:	Made of AISI 304 stainless steel with a thickness of 20/10 mm
Knobs:	Made of aluminum with IPX5 water protection
Flue:	Removable made of cast iron
Kit Gas:	Natural gas conversion kit 30/50 m/bar (tested with natural gas G20)

In order to constantly offer the best possible products we reserve the right to make changes on technical specifications without incurring any obligation for equipment previosly or subsequently sold.

modular

Gas solid top, 2 burners pressed worktop, top

Gas solid top range with 2 burners, counter top model. Side panels, bottom and back made in stainless steel. Top made in AISI 304 thickness 20/10designed for flush alignment. Rear flue made in enamelled cast-iron. Cooking plate made in extra-thick cast iron with extractable central plate. The central zone can reach 500°c while decreasing awards (to 300 °C). Heating by cast iron burner with 7 kW power. Gas supply by means of safety tap with pilot flame and safety thermocouple. Iignition by means of piezoelectric device with waterproof cap. Plate dimensions 380x710. Rapid burners made in cast iron and brass sealed to the top. Gas supply by safety taps with thermocouple and pilot burner for the automatic ignition of main burner. Radioused corners top, easy to clean, equipped with high thick enamelled cast-iron hobs resistent to acid, alkali and flame. (nr.1 burner 10 kW and nr.1 burner 6 kW. (Available burner powers 3,5 kW, 6 kW, 7,5 kW, 10 kW). Special design knobs to avoid water penetration in the control panel. Adjustable feet. IPX5 protection rating. Gas total power 23 kW.

Technical draw

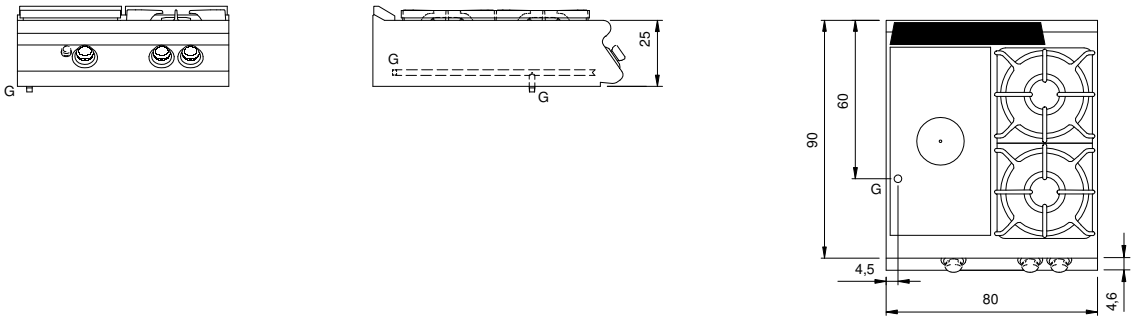

G: Gas connection 1/2"

In order to constantly offer the best possible products we reserve the right to make changes on technical specifications without incurring any obligation for equipment previosly or subsequently sold.